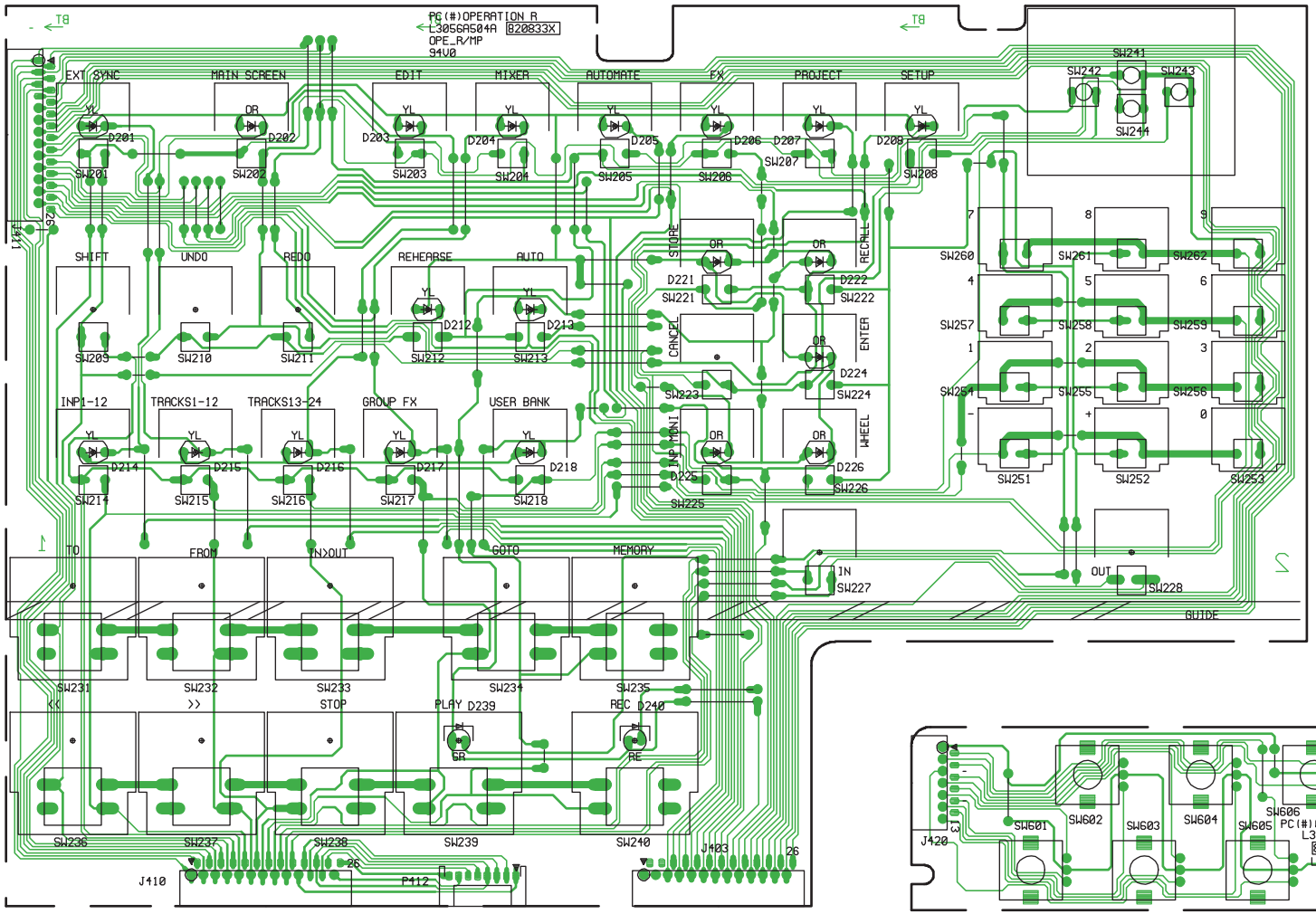

PC OPERATION BLK

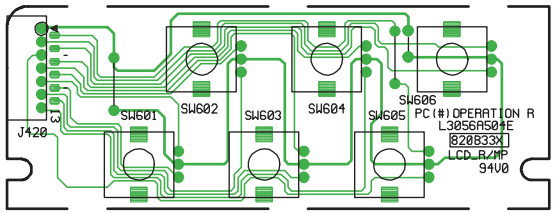

PC Q-LINK BLK

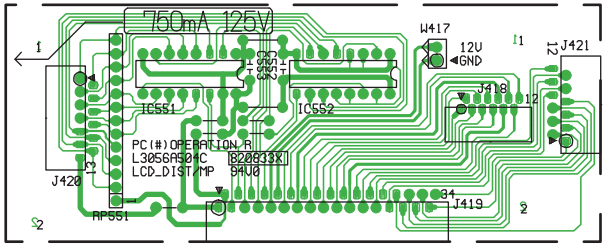

PC LCD-DIST BLK

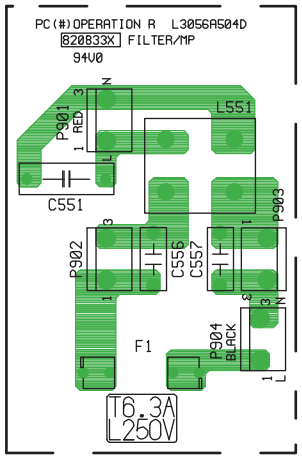

PC FILTER BLK

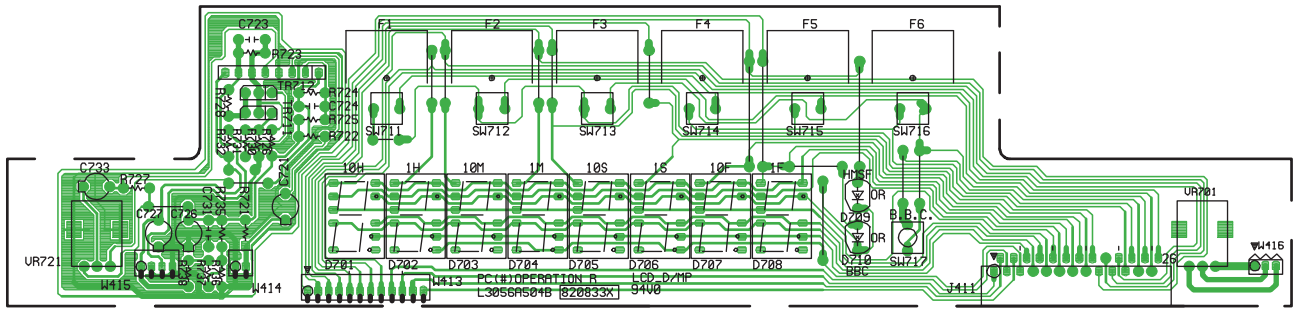

PC 7 SEG BLK

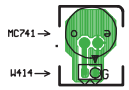

PC MIC BLK

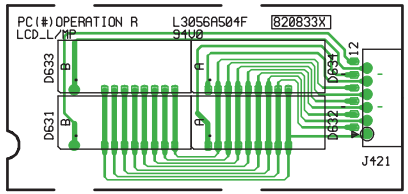

PC METER BLK